3 601 J92 U04

Stand ~~06-08~~
Issue 06-09-18

Fig./Abb. 1

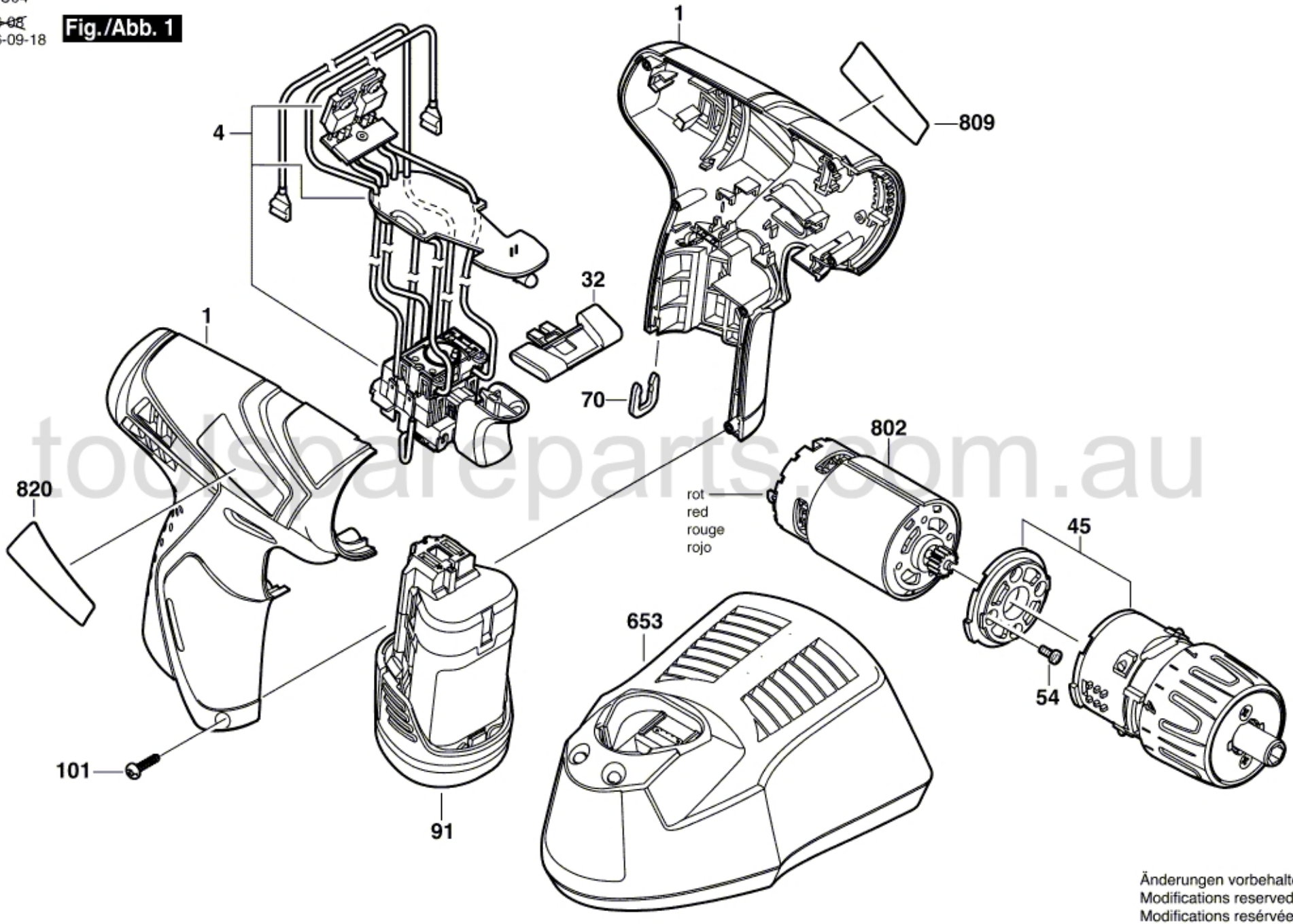

toolspareparts.com.au

Änderungen vorbehalten
Modifications reserved
Modifications resérvées
Salvo modificaciones